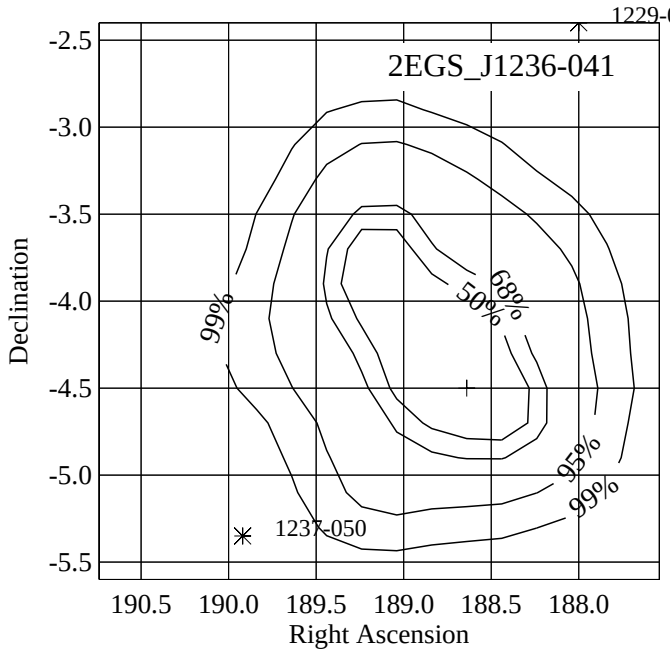
2EGS_J1236-041
1229-021
1237-050
99%
68%
50%
95%
99%
Declination
Right Ascension
-2.5
-3.0
-3.5
-4.0
-4.5
-5.0
-5.5
190.5
190.0
189.5
189.0
188.5
188.0

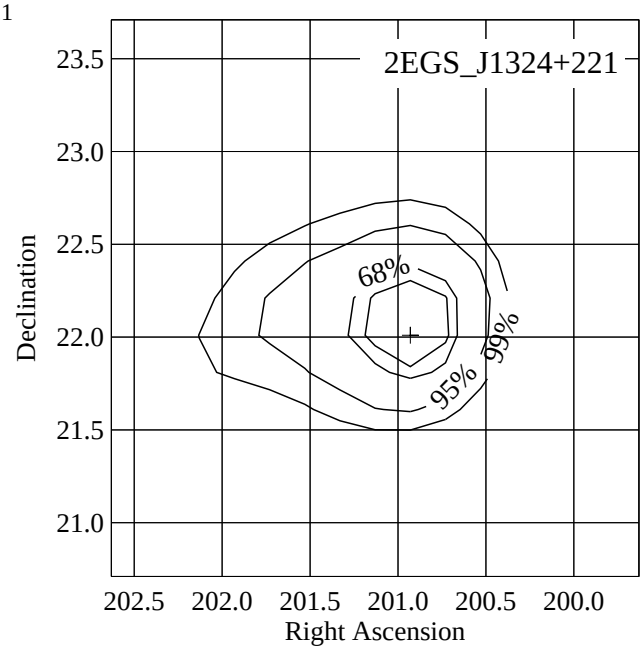
2EGS_J1324+221
68%
95%
99%
Declination
Right Ascension
23.5
23.0
22.5
22.0
21.5
21.0
202.5
202.0
201.5
201.0
200.5
200.0

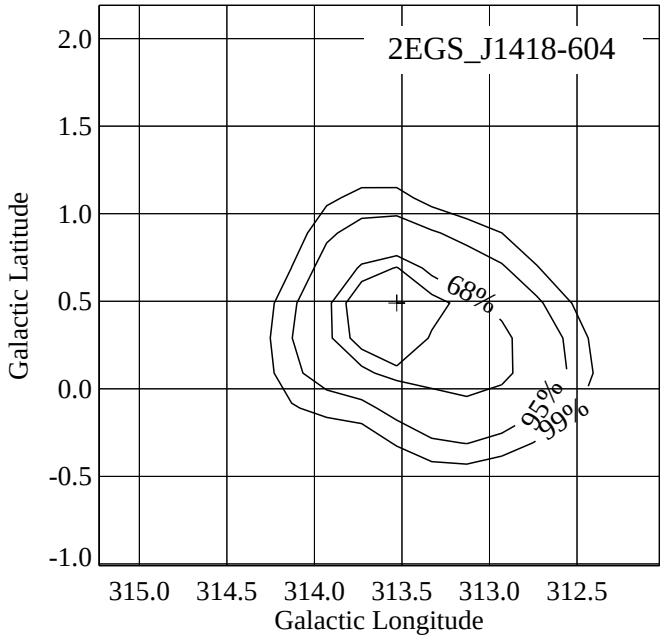
2EGS_J1418-604
68%
95%
99%
Galactic Latitude
Galactic Longitude
2.0
1.5
1.0
0.5
0.0
-0.5
-1.0
315.0
314.5
314.0
313.5
313.0
312.5

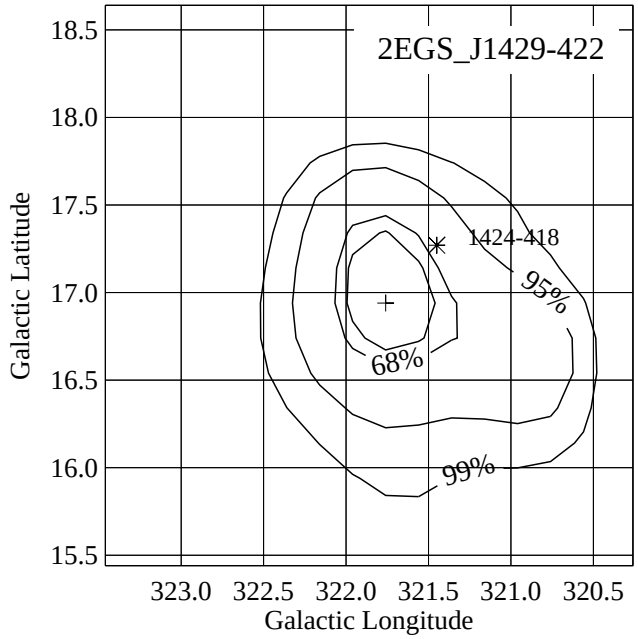
2EGS_J1429-422
1424-418
95%
68%
99%
Galactic Latitude
Galactic Longitude
18.5
18.0
17.5
17.0
16.5
16.0
15.5
323.0
322.5
322.0
321.5
321.0
320.5

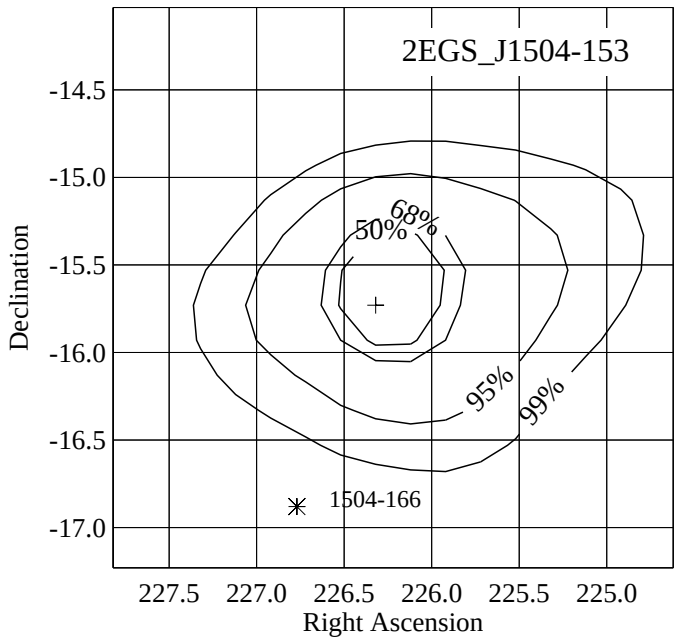
2EGS_J1504-153
68%
50%
95%
99%
1504-166
Declination
Right Ascension
-14.5
-15.0
-15.5
-16.0
-16.5
-17.0
227.5
227.0
226.5
226.0
225.5
225.0

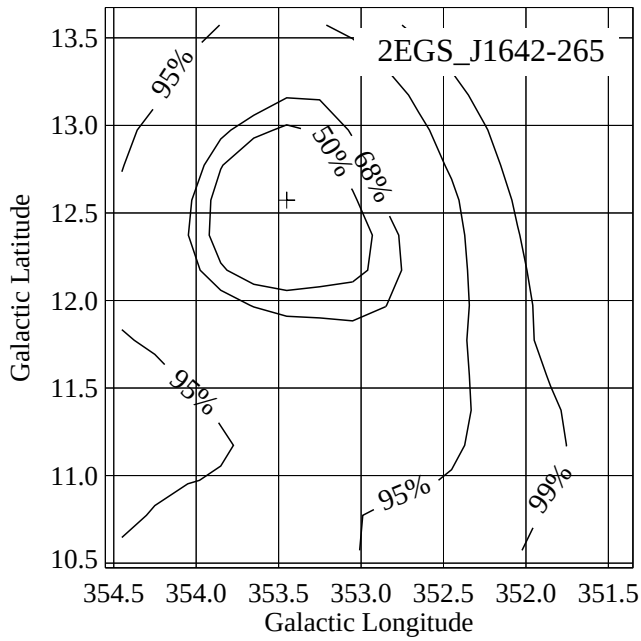
2EGS_J1642-265
95%
50%
68%
95%
95%
99%
Galactic Latitude
Galactic Longitude
13.5
13.0
12.5
12.0
11.5
11.0
10.5
354.5
354.0
353.5
353.0
352.5
352.0
351.5