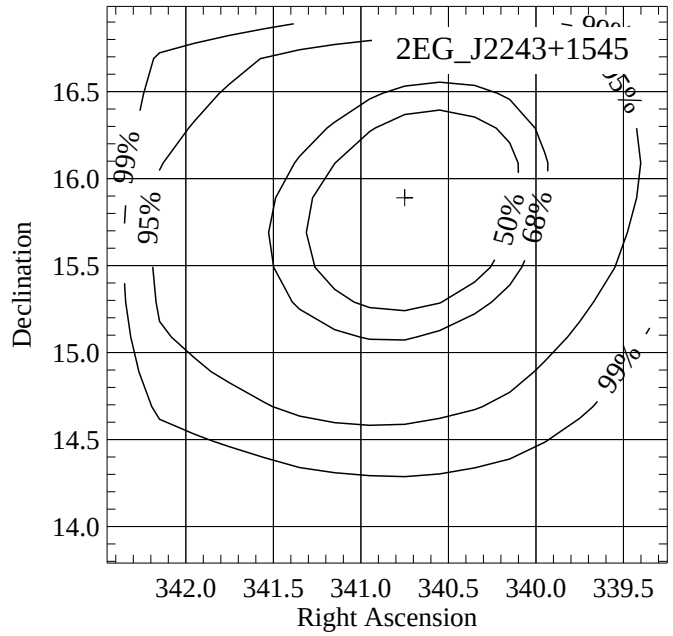
2EG_J2243+1545
99%
95%
50%
68%
99%
16.5
16.0
15.5
15.0
14.5
14.0
Declination
342.0
341.5
341.0
340.5
340.0
339.5
Right Ascension

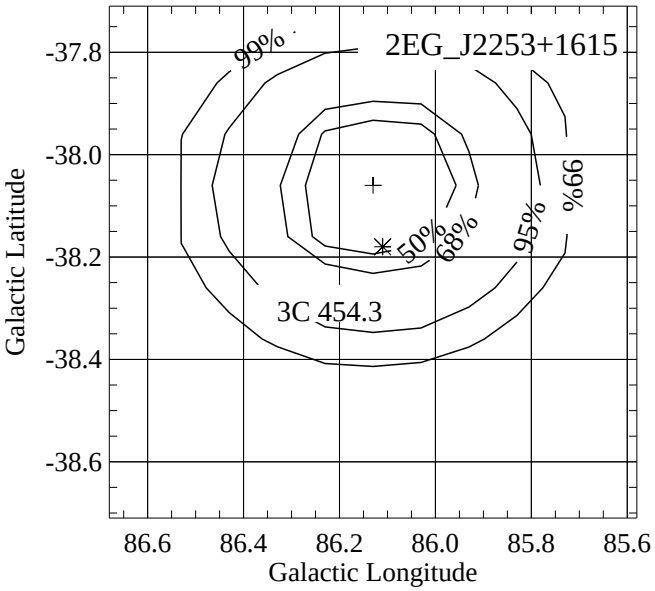
2EG_J2253+1615
99%
50%
68%
95%
3C 454.3
-37.8
-38.0
-38.2
-38.4
-38.6
Galactic Latitude
86.6
86.4
86.2
86.0
85.8
85.6
Galactic Longitude

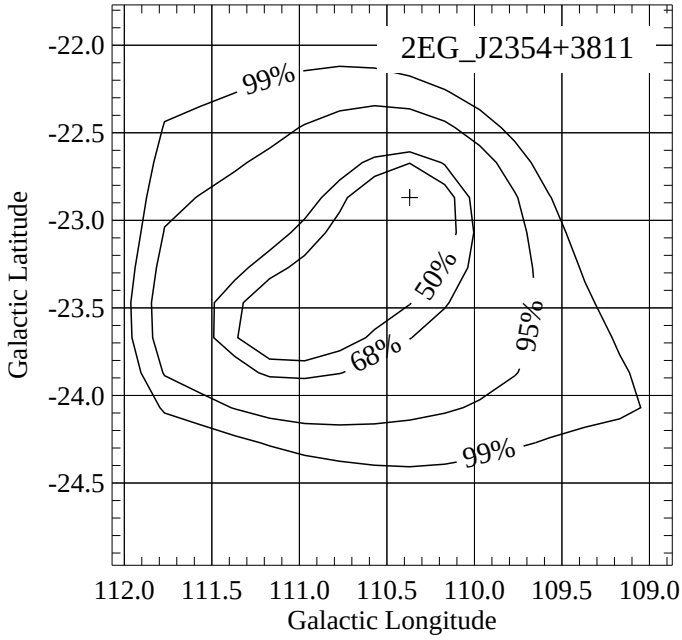
2EG_J2354+3811
99%
50%
68%
95%
99%
-22.0
-22.5
-23.0
-23.5
-24.0
-24.5
Galactic Latitude
112.0
111.5
111.0
110.5
110.0
109.5
109.0
Galactic Longitude